Concealed frame, for wall-mounted toilet bowls

Product code: CST_WC01
EAN: 5908212086582
Color: black
Warranty [years]: 10

Concealed toilet frame

Width [mm]	510
Height [mm]	1176
Depth [mm]	160

Features:
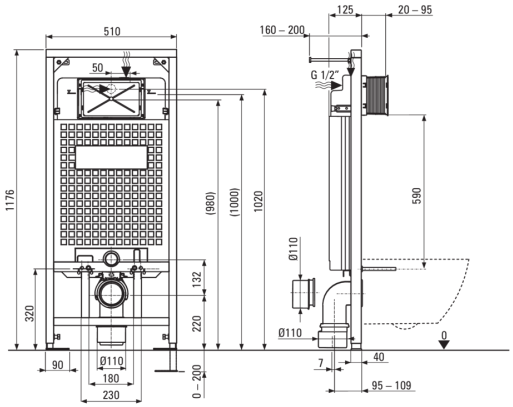
- Dedicated cleaning agent, safe for cleaned surfaces